KM 336 Uni Pro

Front View

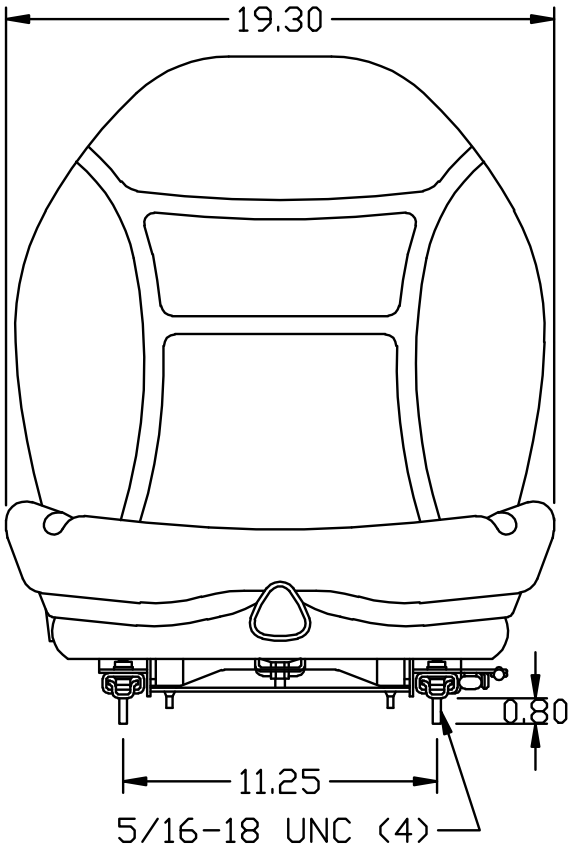
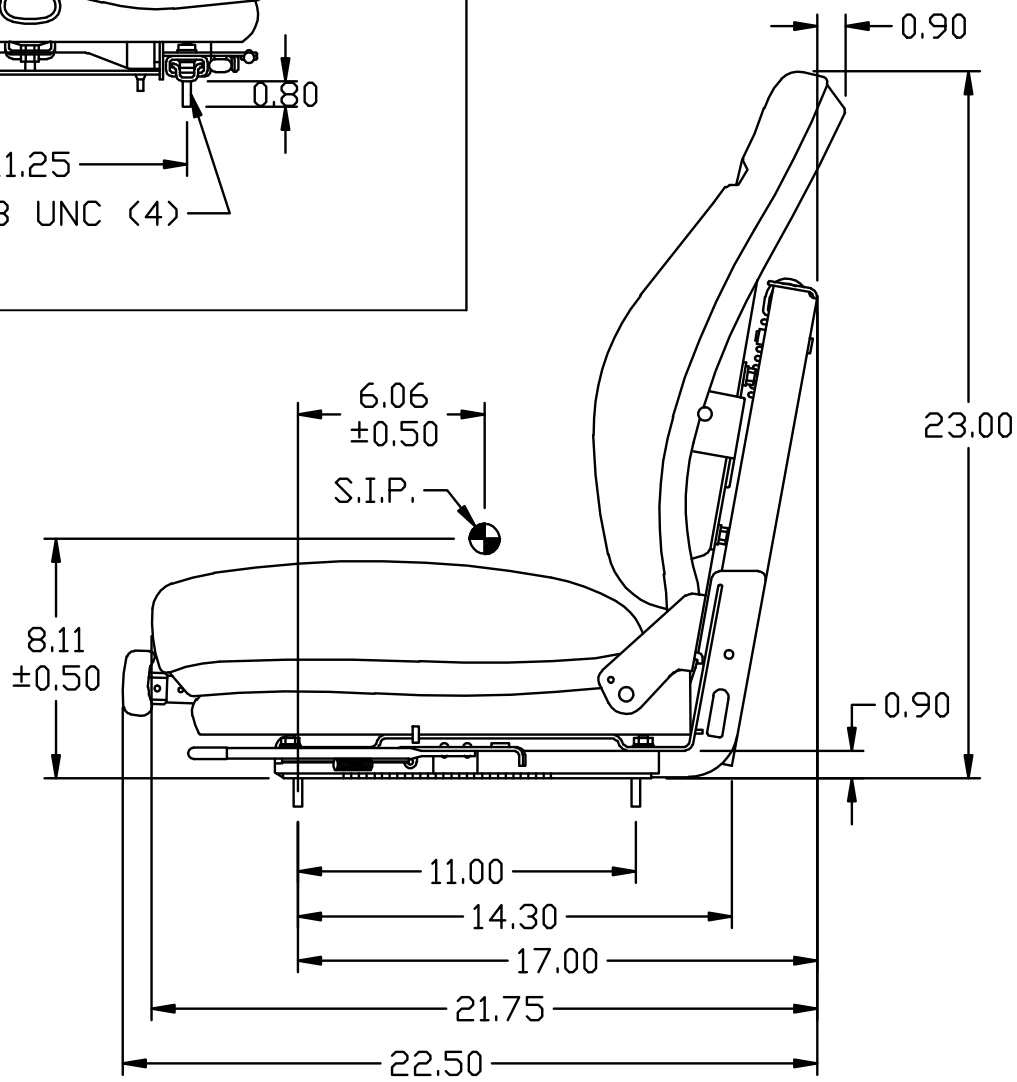
Side View