KM 1004 Uni Pro

Front View

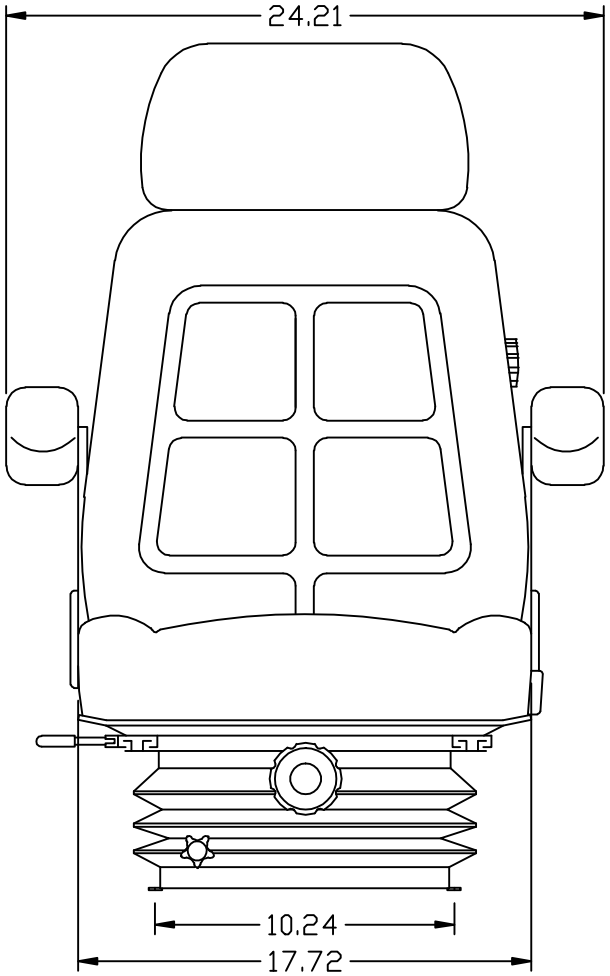

Bottom View

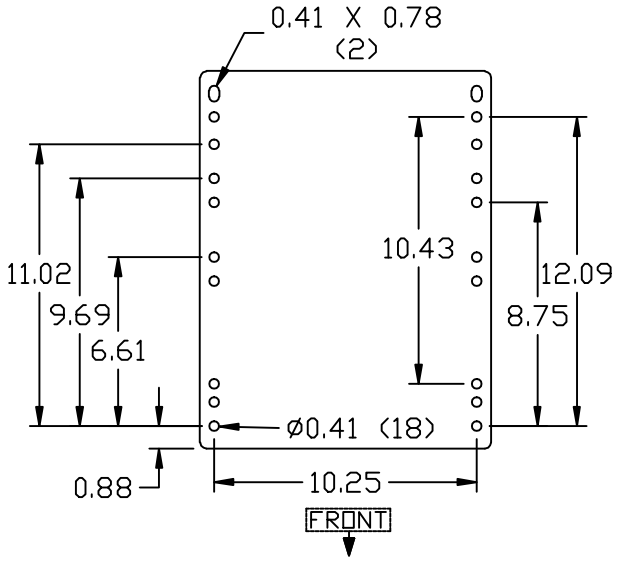
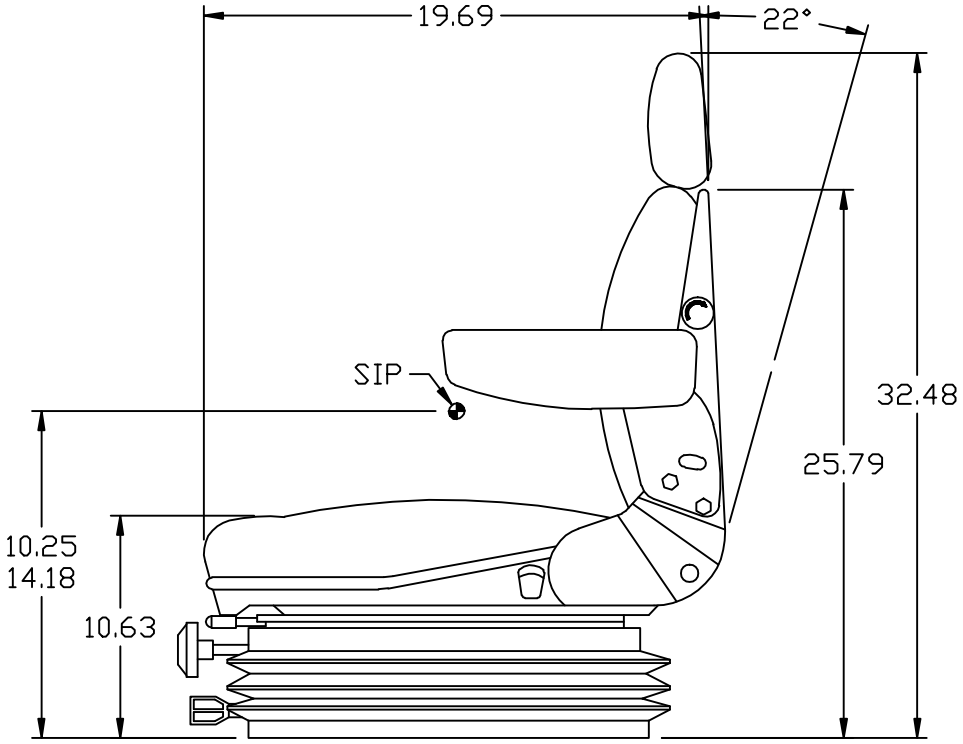
Side View