Mini Milling Machine

OWNER'S MANUAL

⚠ WARNING:
Read carefully and understand all ASSEMBLY AND OPERATION INSTRUCTIONS before operating. Failure to follow the safety rules and other basic safety precautions may result in serious personal injury.

Item# 49657

Thank you very much for choosing a Klutch product. For future reference, please complete the owner's record below:
Serial Number/Lot Date Code: _____ Purchase Date: _____
Save the receipt, warranty and these instructions. It is important that you read the entire manual to become familiar with this product before you begin using it.

This mini milling machine is designed for certain applications only. Northern Tool and Equipment cannot be responsible for issues arising from modification or use of this product in an application for which it was not designed. We strongly recommend that this product not be modified and/or used for any application other than that for which it was designed.

For technical questions please call 1-800-222-5381.

Table of Contents

Intended Use

This milling machine is designed for drilling and deep milling with multiple functions for either face milling or drilling including milling head and column tilts to 45°, left or right.

Technical Specifications

Property	Specification
Max. table travel	8-1/2" (220mm)
Max. cross slide	4" (100mm)
Max. spindle travel	7" (180mm)
Spindle Rotary Angle	-45° to +45°
Spindle Speed	Low: 0-1100 rpm, High: 0-2500 rpm
Taper of hole in spindle*	MT #3 or R8
Milling Capacity	5/8" (16mm) Face
Milling Capacity	1-3/16" (30mm)
Shipping Weight	150 lbs. (68kg)
Machine Weight	110 lbs. (50kg)
Noise levels	70~75dB (A)
Dimensions	20-1/2 (L) x 20-1/16 (W) x 29-15/16

T-Slot Specification (mm)

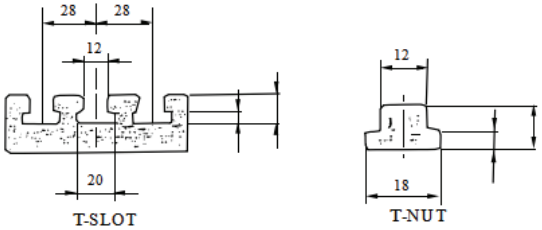

Important Safety Considerations

⚠ WARNING:

- Read and understand all instructions. Failure to follow all instructions may result in serious injury or property damage.
- The warnings, cautions, and instructions in this manual cannot cover all possible conditions or situations that could occur. Exercise common sense and caution when using this tool. Always be aware of the environment and ensure that the tool is used in a safe and responsible manner.
- Do not allow persons to operate or assemble the product until they have read this manual and have developed a thorough understanding of how it works.
- Do not modify this product in any way. Unauthorized modification may impair the function and/or safety and could affect the life of the product. There are specific applications for which the product was designed.
- Use the right tool for the job. DO NOT attempt to force small equipment to do the work of larger industrial equipment. There are certain applications for which this equipment was designed. It will do the job better and more safely at the capacity for which it was intended. DO NOT use this equipment for a purpose for which it was not intended.
- Industrial or commercial applications must follow OSHA requirements.

⚠ WARNING:

- This product may contain chemicals known to the State of California to cause cancer, birth defects or other reproductive harm.

- Some dust created by power sanding, sawing, grinding, drilling, and other construction activities contains chemicals known to the State of California to cause cancer, birth defects, or other reproductive harm. Some examples of these chemicals are:
  - lead from lead-based paints,
  - crystalline silica from bricks and cement and other masonry products, and
  - arsenic and chromium from chemically-treated lumber.

  Your risk from these exposures varies, depending on how often you do this type of work. To reduce your exposure to these chemicals: work in a well-ventilated area, and work with approved safety equipment, such as dust masks that are specially designed to filter out microscopic particles.
- Handling power cords on corded products may expose you to lead, a chemical known to the State of California to cause cancer and birth defects or other reproductive harm. Wash your hands after handling.

⚠ WARNING:

WORK AREA SAFETY

- Inspect the work area before each use. Keep work area clean, dry, free of clutter, and well lit. Cluttered, wet, or dark work areas can result in injury. Using the tool in confined work areas may put you dangerously close to other cutting tools and rotating parts.
- Do not use the product where there is a risk of causing a fire or an explosion; e.g., in the presence of flammable liquids, gases, or dust. The product can create sparks, which may ignite the flammable liquids, gases, or dust.
- Do not allow the product to come into contact with an electrical source. The tool is not insulated and contact will cause electrical shock.
- Keep children and bystanders away from the work area while operating the tool. Do not allow children to handle the tool.
- Be aware of all power lines, electrical circuits, water pipes, and other mechanical hazards in your work area. Some of these hazards may be hidden from your view and may cause personal injury and/or property damage if contacted.

⚠ WARNING:

PERSONAL SAFETY

- Stay alert, watch what you are doing, and use common sense when operating the tool. Do not use the tool while you are tired or under the influence of drugs, alcohol, or medication. A moment of inattention while operating the tool may result in serious personal injury.
- Dress properly. Do not wear loose clothing, dangling objects, or jewelry. Keep your hair, clothing and gloves away from moving parts. Loose clothes, jewelry, or long hair can be caught in moving parts. Air vents on the tool often cover moving parts and should be avoided.
- Wear the proper personal protective equipment when necessary. Use ANSI Z87.1 compliant safety goggles (not safety glasses) with side shields, or when needed, a face shield. Use a dust mask in dusty work conditions. Also use non-skid safety shoes, hardhat, gloves, dust collection systems, and hearing protection when appropriate. This applies to all persons in the work area.
- Do not overreach. Keep proper footing and balance at all times.
- Do not use the tool when tired or under the influence of drugs, alcohol or medication.
- Ensure the power switch is off prior to plugging in the tool.
- Remove keys or wrenches before connecting the tool to an air supply, power supply, or turning on the tool. A wrench or key that is left attached to a rotating part of the tool may cause personal injury.
- Secure the work with clamps or a vise instead of your hand when practical. This safety precaution allows for proper tool operation using both hands.

⚠ WARNING:

ELECTRICAL SAFETY

- Grounded tools must be plugged into an outlet properly installed and grounded in accordance with all codes and ordinances. Never remove the grounding prong or modify the plug in any way. Do not use any adapter plugs. Check with a qualified electrician if you are in doubt as to whether the outlet is properly grounded. If the tools should electrically malfunction or break down, grounding provides a low resistance path to carry electricity away from the user.
- Double insulated tools are equipped with a polarized plug (one blade is wider than the other). This plug will fit in a polarized outlet only one way. If the plug does not fit fully in the outlet, reverse the plug. If it still does not fit, contact a qualified electrician to install a polarized outlet. Do not change the plug in any way. Double insulation eliminates the need for the three wire grounded power cord and grounded power supply system.
- Do not allow the product to come into contact with an electrical source. The tool is not insulated and contact will cause electrical shock.
- Avoid body contact with grounded surfaces such as pipes, radiators, ranges, and refrigerators. There is an increased risk of electric shock if your body is grounded.
- Do not expose power tools to rain or wet conditions. Water entering a power tool will increase the risk of electric shock.
- Do not abuse the power cord. Never use the power cord to carry the tools or pull the plug from an outlet. Keep the power cord away from heat, oil, sharp edges, or moving parts. Replace damaged power cords immediately. Damaged power cords increase the risk of electric shock.
- When operating a power tool outside, use an outdoor extension cords marked "W-A" or "W". These extension cords are rated for outdoor use, and reduce the risk of electric shock.

⚠ CAUTION:

PRODUCT USE AND CARE

- Do not force the product. Products do a better and safer job when used in the manner for which they are designed. Plan your work, and use the correct product for the job.
- Check for damaged parts before each use. Carefully check that the product will operate properly and perform its intended function. Replace damaged or worn parts immediately. Never operate the product with a damaged part.
- Do not use a product with a malfunctioning switch. Any power tool that cannot be controlled with the power switch is dangerous and must be repaired by an authorized service representative before using.
- Disconnect the power/air supply from the product and place the switch in the locked or off position before making any adjustments, changing accessories, or storing the tool. Such preventive safety measures reduce the risk of starting the tool accidentally.
- Store the product when it is not in use. Store it in a dry, secure place out of the reach of children. Inspect the tool for good working condition prior to storage and before re-use.
- Use only accessories that are recommended by the manufacturer for use with your product. Accessories that may be suitable for one product may create a risk of injury when used with another tool. Never use an accessory that has a lower operating speed or operating pressure than the tool itself.
- Keep guards in place and in working order. Never operate the product without the guards in place.
- Do not leave the tool running unattended.

Specific Operation Warnings

WARNING:

- Moving Parts Hazard. Keep hands clear of rotating bit or work piece.
- Wear the proper safety gear including ANSI Z87.1 compliant eye protection.
- The noise level during operation is 70~75dB (A). Wear the appropriate hearing protection.

- DO NOT wear loose clothing, jewelry, gloves, or unrestrained hair that may get caught in moving parts of the machine.
- Remove chuck key before starting the machine.
- Always secure work piece before machining operation.
- DO NOT operate without guards in place.
- Electric shock hazard. Be sure equipment is properly grounded.
- Turn power OFF before servicing.
- Only operate the milling machine in the temperature range of -4 to 104°F (-20 to +40°C).
- Not for use by or around children.

Grounding

⚠ WARNING:

- This machine must be grounded while in use to protect the operator from electrical shock. This drill press is equipped with an electric cord that has an equipment-grounding conductor and a grounding plug. The plug MUST be plugged into a matching receptacle that is properly installed and grounded in accordance with ALL local codes and ordinances.
- DO NOT MODIFY THE PLUG PROVIDED. If it will not fit the receptacle, have the proper receptacle installed by a qualified electrician.
- CHECK with a qualified electrician or service person if you do not completely understand the grounding instructions, or if you are not sure the tool is properly grounded.

Grounded Tools: Tools with 3-Prong Plugs

Tools marked with Grounding Required have a 3-wire cord and 3-prong grounding plug. The plug must be connected to a properly grounded outlet. If the tool should electrically malfunction or break down, grounding provides a low resistance path to carry electricity away from the user, reducing the risk of electric shock. (See Figure A.)

The grounding prong in the plug is connected through the green wire inside the cord to the grounding system in the tool. The green wire in the cord must be the only wire connected to the tool's grounding system and must never be attached to an electrically live terminal.

Your tool must be plugged into an appropriate outlet, properly installed and grounded in accordance with all codes and ordinances. The plug and outlet should look like those in the following illustration.

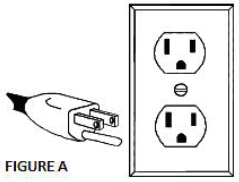

FIGURE A

Double Insulated Tools: Tools with Two-Prong Plugs

Tools marked Double Insulated do not require grounding. They have a special double insulation system which satisfies OSHA requirements and complies with the applicable standards of Underwriters Laboratories, Inc., the Canadian Standard Association, and the National Electrical Code. (See Figure B.)

Double insulated tools may be used in either of the 120 volt outlets shown in the following illustration.

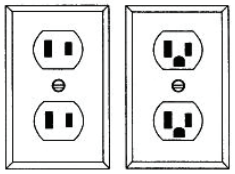

FIGURE B

Extension Cords

⚠ WARNING:

- USE A PROPER EXTENSION CORD. Make sure your extension cord is in good condition. When using an extension cord, be sure to use one heavy enough to carry the current your product will draw. An undersized cord will cause a drop in line voltage, resulting in loss of power and cause overheating.
- Be sure your extension cord is properly wired and in good condition. Always replace a damaged extension cord or have it repaired by a qualified person before using it. Protect your extension cords from sharp objects, excessive heat and damp or wet areas.
- Grounded tools require a 3-wire extension cord. Double Insulated tools can use either a 2- or 3-wire extension cord.
- As the distance from the supply outlet increases, you must use a heavier gauge extension cord. Using extension cords with inadequately sized wire causes a serious drop in voltage, resulting in loss of power and possible tool damage.
- The smaller the gauge number of the wire, the greater the capacity of the cord. For example, a 14-gauge cord can carry a higher current than a 16-gauge cord. Minimum extension cord wire size is shown in the following table:

Minimum Wire Size Of Extension Cords				
Nameplate AMPS	Cord Length			
	25'	50'	100'	150'
0-6	18 AWG	16 AWG	16 AWG	14 AWG
6-10	18 AWG	16 AWG	14 AWG	12 AWG
10-12	16 AWG	16 AWG	14 AWG	12 AWG
12-16	14 AWG	12 AWG	NOT RECOMMENDED	

- When using more than one extension cord to make up the total length, make sure each cord contains at least the minimum wire size required.
- If you are using one extension cord for more than one tool, add the nameplate amperes and use the sum to determine the required minimum cord size.
- If you are using an extension cord outdoors, make sure it is marked with the suffix W-A (W in Canada) to indicate it is acceptable for outdoor use.
- Make sure your extension cord is properly wired and in good electrical condition. Always replace a damaged extension cord or have it repaired by a qualified electrician before using it.
- Protect your extension cords from sharp objects, excessive heat, and damp or wet areas.

Main Parts

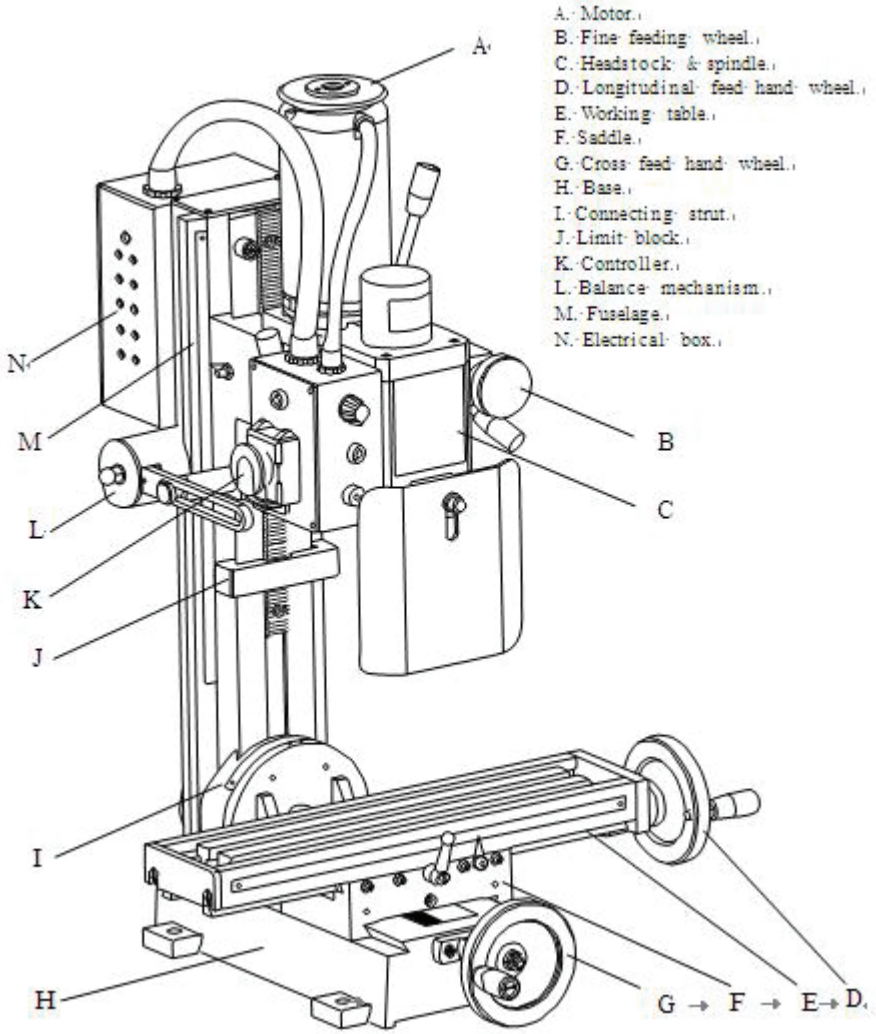

Assembly Instructions

When unpacking the milling machine, check the shipping crate contents to ensure all parts are present. If any pieces are missing, call the distributor at the number in the Replacement Parts section of this manual.

Packing list of Accessories
1. Large wrench S: 36
2. Drill chuck & taper shank
3. Oil can
4. Fixing Pin
5. L Hex. Wrench S: 3,4,5,6
6. Socket head wrench D: 45-52
7. Double end wrench 8-10, 14-17, 17-19
8. Drill chuck holder
9. Handle
10. T-Nut
11. Fuse 5A (110V) or 3A (230V)
12. Draw bar

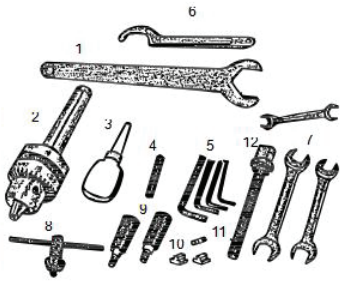

Installation of the Milling Machine
Clean rust protected surfaces with kerosene, diesel oil, or a mild solvent. Do not use cellulose-based solvents such as paint thinner or lacquer thinner. These will damage painted surfaces.
The machine should be secured on the working table with four bolts.
- The working table should have a flat surface and enough space around the location to accommodate hand wheel operation and large workpieces.
- Avoid a place with direct sunshine, heavy moisture and dust.

Drill 4 locating holes on working table with the same spacing dimensions as the holes on the machine's base: .
Position the machine and bolt it to the worktable with 4 M10 bolts and nuts (not included).

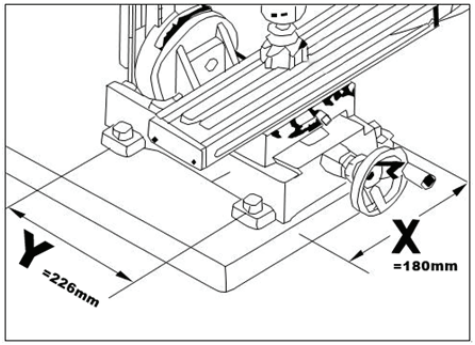

⚠ WARNING:
- Make sure the milling machine is disconnected from power before any setup, adjustments, maintenance, or cleaning to avoid accidental starts that may cause personal injury.

Power Connection
- For safety reasons, DO NOT change the machine cord plug.
- Voltage of the milling machine is 110V or 230V, single phase, 50/60Hz. (see label on the front of the machine)
- For the protection of the controller, the owner must supply a fuse with a current rating based on the extension cable length and size. See the chart below to determine the fuse size. The fuse is put in the bottom front of the controller (F in the picture below).

EXTENSION LEAD CHART

Ampere rating	3A	6A	10A	13A
Extension Cable Length	Wire Size mm^2			
7.5m	0.75	0.75	1.0	1.25
15m	0.75	0.75	1.0	1.5
22.5m	0.75	0.75	1.0	1.5
30m	0.75	0.75	1.25	1.5
45.5m	0.75	1.25	1.5	2.5

Initial Start
1. Perform the pre-check steps 1-6 in the Before Each Use section.
2. Set the HIGH-LOW range lever to Low then insert the electric plug into the wall outlet.

CAUTION: NEVER change the HIGH/LOW range when the machine is running.

3. Release the Emergency Stop Switch (A) by pushing down on the red knob slightly and pushing it up, as indicated by the arrow on the top of the red knob.
4. Turn on the machine by GENTLY turning the Variable Speed Control knob (D), clockwise. A click will be heard as motor power is turn on, but the spindle will not rotate until the knob is turning clockwise a little further.
5. Speed increases the further the knob is turned.
   a. Run the machine for 5 minutes, during which time gradually increase the speed to its maximum.
   b. Run for at least 2 minutes at max speed
   c. Stop the machine and disconnect it from power.
6. Check that all components are still secure and working freely and correctly.
7. Check also to ensure the mounting is secure.
8. Repeat this procedure from step 2 but at the HIGH range setting.

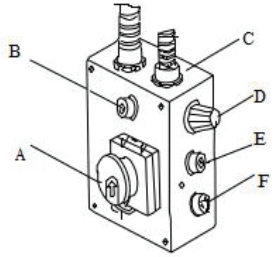

A. Emergency stop switch
B. Yellow lamp
C. Electric control box
D. Variable speed control knob
E. Green lamp
F. Fuse box

Before Each Use

⚠ WARNING:
- Put the switch in the locked or off position before making any adjustments, changing accessories, or storing the machine. Such preventive safety measures reduce the risk of starting the machine accidentally.
- Check for damaged parts before each use. Carefully check that the machine will operate properly and perform its intended function. Replace damaged or worn parts immediately. Never operate the machine with a damaged part.

Pre-Start Checks Before Operation
1. Remove all of wrenches or keys from the machine.
2. Check whether the power voltage is suited to the machine.
   (See the label on the front of the machine.)
3. Clear the area around the machine of items that are not needed.
4. Check all the adjustment bolts for tightness.
5. Apply some lubricant on all of the contact faces (see Maintenance: Lubrication)
5. Check the chuck, chuck holder and fixing pin on spindle to make sure they are unloaded.
6. Check the speed setting to verify it is OFF before starting .
7. Turn on the machine and check the direction of spindle rotating (clockwise).
8. Operate the controls (longitudinal-feed wheel, cross-feed wheel, and vertical handle) to ensure correct operation,

Travel Adjustment
Use the limit block (65) to control the traveling l
imit of the spindle.
1. Loosen the handle (a) beside of the limit block (b).
2. Adjust the limit block (b) up or down into position.
3. Retighten the handle.
4. Travel position can refer to the ruler on the fuselage rotary.

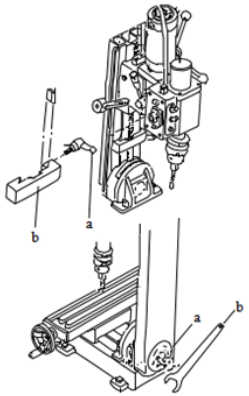

Adjust Tip Angle of Fuselage
1. Turn off the electric power.
2. Hold the fuselage to keep it from falling.
3. Loosen the lock nut (a, #70) with large wrench (b)
4. Adjust the fuselage angle as needed according to the scale (44) on the connecting strut (72). (max angle 45°, left or right)
5. Tighten it.

Installation of a Chuck or Cutter
1. Turn off the electric power.
2. Pull out the protective cover (a).
3. Wipe off the spindle sleeve and taper shank (g).
4. If installing a cutter: Put the taper shank (g) into the spindle sleeve. Put a cutter (i) - wrapped with an oil cloth for safety against cuts – onto the taper shank.
   If installing a drill chuck: put the taper shank of the chuck into the spindle sleeve.
5. Insert the fixing pin (d) right on spindle sleeve to prevent rotation.
6. Use the #14 open end wrench (c) to tighten (clockwise) spindle draw bar (b) to secure the cutter taper shank or chuck taper shank.
7. Pull out the fixing pin (d). CAUTION: leaving the fixing pin inserted will cause damage to the milling machine when it is turned on!
8. Reinstall the protective cover (a).

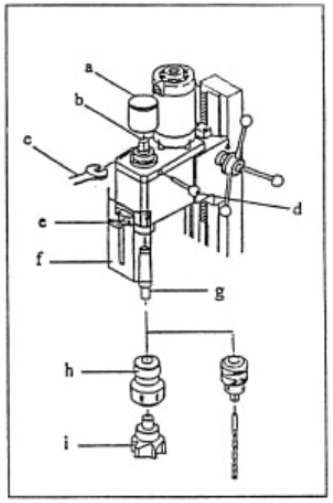

Removal of a Chuck or Cutter
1. Turn off the electric power.
2. If removing a cutter, wrap the cutter in an oil cloth for safety against cuts.
3. Pull out the protective cover (a).
4. Insert fixing pin (d) right on spindle sleeve to prevent rotation.
5, Use the #14 open end wrench (c) to loosen (counter-clockwise) the spindle draw bar (b).
6. Tap the cutter taper shank (g), or drill chuck taper shank, gently with a plastic hammer to loosen it in spindle sleeve. Then remove the taper shank (g).
7. Install the protective cover (a).

Operating Instructions

⚠ WARNING:
- Do not use the machine with a malfunctioning switch. Any power tool that cannot be controlled with the power switch is dangerous and must be repaired by an authorized service technician before using.

- Use only recommended accessories with the machine. Accessories that may be suitable for one tool may create a risk of injury when used with another tool. Never use an accessory that has a lower maximum operating speed than the machine.
- Never operate the tool without the guards in place.
- Do not leave the tool running unattended.
- In the event of a power failure while a tool is being used, turn the Emergency Stop switch to OFF and speed switch to 0 to prevent surprise starting when power is restored.

Normal Starting

⚠ WARNING:
- NEVER change from the HIGH to LOW setting when the machine is running.

1. Perform all the pre-start checks in the Before Each Use section and ensure the work piece is secured in place.
2. Set the speed range control lever to HIGH or LOW as required.
3. Release the Emergency Stop Switch (A) by pushing down on the red knob slightly and pushing it up, as indicated by the arrow on the top of the red knob.
4. Turn on the machine by GENTLY turning the Variable Speed Control knob (D), clockwise. Turn the knob to the desired speed for the workpiece.
5. Begin operation according to the appropriate section below.

ATTENTION: The power supply system of this machine has an auto over-load protective function. If the feeding is too fast or drilling is too deep, the system will stop working, a yellow lamp (B) lights. Turn off the Variable Speed control knob (D) then turn it on again. The system will work again and the yellow lamp will extinguish automatically.

Drilling or Milling Speed
Before any operation, set the spindle to a correct speed for the work.
The operating speed range for working is 0 to 2500 rpm, For the most part, the correct speed may consider the size of working face and the material. Generally, use a higher speed for softer materials or smaller holes. Use a lower speed for harder materials or bigger holes.
A good rule of thumb is: For smaller hole and the softer material, please use higher speed. But don't drill too fast (above 2300 rpm) if your workpiece is wood, you may burn it. For metal, the speed can from 0 to 2500 rpm.

Drilling or Deep Milling
1. Replace the chuck or cutter according to the 'Before Each Use' instructions.
2. Select the appropriate speed level.
   ATTENTION: Never change the High/Low speed while the spindle is spinning!
3. Use a fixture to secure the workpiece on the working table.
4. Adjust the working table (Longitudinal- and Cross–feed wheels).
5. Loosen the limit block handle and adjust the block position. Note: don't let tool meet the workpiece.
6. Remove any tools and items from around the machine.
7. Turn on power.
8. Refer the ruler on fuselage can know drilling or milling depth.
9. When finished working, turn off power and move the spindle to its top position.
10. Clean the machine and apply a little oil to the work table to protect it.

Face Milling
1. Replace the chuck or cutter according to the 'Before Each Use' instructions.
2. Select the appropriate speed level.
   ATTENTION: Never change the High/Low speed while the spindle is spinning!
3. Use a fixture to secure the workpiece on the working table.
4. Adjust the working table (Longitudinal- and Cross–feed wheels).
5. Loosen the limit block handle, and adjust the block position. Note: don't let tool meet the workpiece.

6. Arrange any tools around the machine.
7. Turn on power.
8. Turn the hand wheels of the working table (Longitudinal- and Cross–feed wheels) to perform the face milling.
9. When finished working, turn off power, move the spindle to its top position, and release the workpiece.
10. Clean the machine and apply a little oil to the work table to protect it.

During Operation
Note that the milling machine will shake under any of the following conditions:
a. The depth of the cut is too deep.
b. The feeding speed is too fast.
c. The rotation speed is too fast.
d. The machine and stock plane are not fixed firmly.
e. The vice and workpiece is not fixed firmly.

After Each Use

Store the machine when it is not in use according to the following principles:
- Inspect the machine for good working condition prior to storage.
- Apply a thin coat of oil on the surfaces that not painted to prevent rust.
- Store it in a dry, secure place out of the reach of children.
- The ambient temperature range suitable for storage is -4 to 104ºF (-20 to +40ºC).

Maintenance

⚠ **WARNING:**
- Turn the Emergency Stop switch to OFF and speed switch to 0 before making any adjustments, changing accessories, or storing the tool. Such preventive safety measures reduce the risk of starting the tool accidentally.
- Use only recommended accessories with the milling machine. Accessories that may be suitable for one tool may create a risk of injury when used with another tool. Never use an accessory that has a lower maximum operating speed than the machine itself.

Maintain the milling machine. Keep the machine in good repair by adopting a program of conscientious repair and maintenance in accordance with the recommended procedures found in this manual.
- Keep all cutting tools sharp and clean. Properly maintained cutting tools with sharp cutting edges are less likely to bind and are easier to control.
- Keep handles dry, clean, and free from oil and grease.
- If an abnormal situation occurs beyond regular maintenance; contact an authorized service technician for service.

Daily Maintenance
- Inspect each operating part to ensure proper lubrication.
- Examine the working components for wear, damage or other abnormal condition.

Seasonal Maintenance
- Use a clean cotton or soft gauze to thoroughly clean each part of the machine.
- Confirm whether the motion of the machine's spindle and fixtures are smooth or loose.
- Check whether the spindle is spinning true or wobbling.
- Check each bolt and nut for wear or damage or whether they are loose.

Examine the circuitry (contact points, conductor, plugs, and switches) to ensure normal conditions. Maintenance of Accessories
Keep the taper shank clean.

Lubrication
In order to ensure precise operation, keep the contact faces lubricated. In the accessories that came with the milling machine, there is an oil-can to use for lubrication. The following are the items that need to be lubricated.

USE LUBRICATING OIL	USE LUBRICATING GREASE
Base (1) and saddle (35) slide face	X-Axis feeding screw (2)
Saddle (35 and working table (19) slide face	Y-Axis feeding screw (20)
Fuselage (68) and connecting strut (72) slide face	Z-Axis feeding gear rack (46)
Fuselage (68) and spindle (79) slide face	

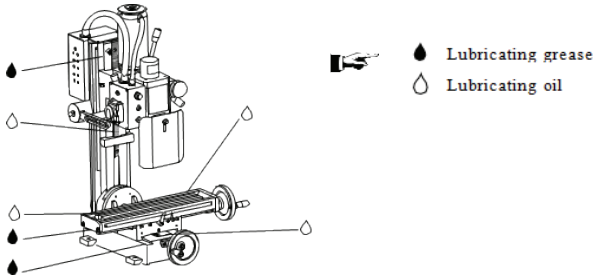

Miter Wedge Adjustment
After long-term use of the milling machine, functional error may occur due to repeated surface motion on the wedges which act as interfaces on each slide face. In order to eliminate this error the machine uses adjusting screws to maintain pressure between two sliding parts (ex. Spindle Box and Fuselage) use the following information to adjust contact pressure to maintain mechanical precision.

The following items need pressure adjustments
- Basement and saddle seat slide face (34).

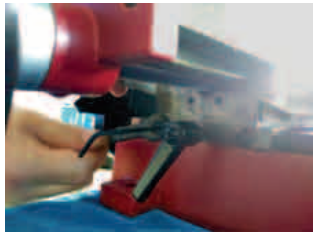

- Saddle seat and working table slide face (36).

- Fuselage seat and connecting strut slide face (45).

NOTE: The position has been well-adjusted in the factory and no need to adjust it by users.

- Fuselage and spindle box slide face (64).

Perform Every Year

Note: Move the spindle box to its highest position when not in use.

To adjust pressure (on each slide face):

1. Loosen the locked nuts.
2. Adjust the pressure of the wedge.
3. Tighten or loosen the adjusting screws and keep in mind that the pressure of each adjusting screw should be the same.
4. Tighten the locked nut while using the #3 hexagonal wrench to keep the adjusting screw from rotating and cause unbalanced pressure.

Adjust the middle portion first and then go to toward the interior from two sides you are adjusting the screw in order to ensure an uniform pressure.

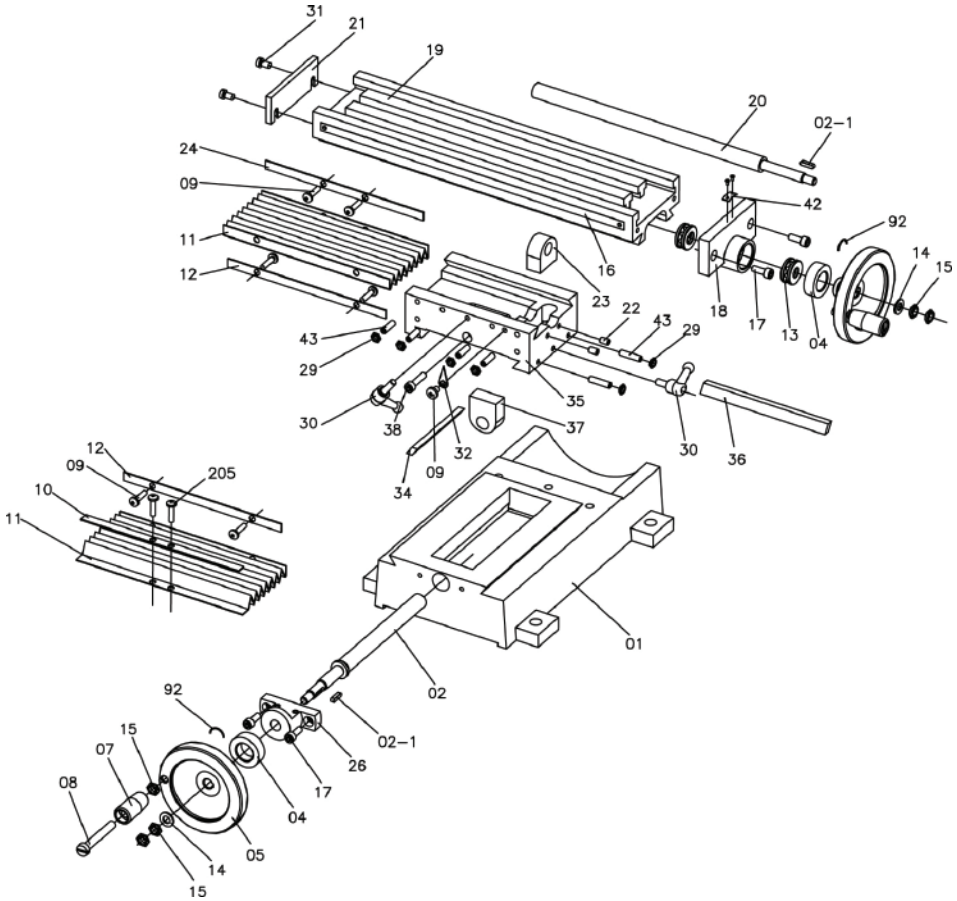

Parts Diagram

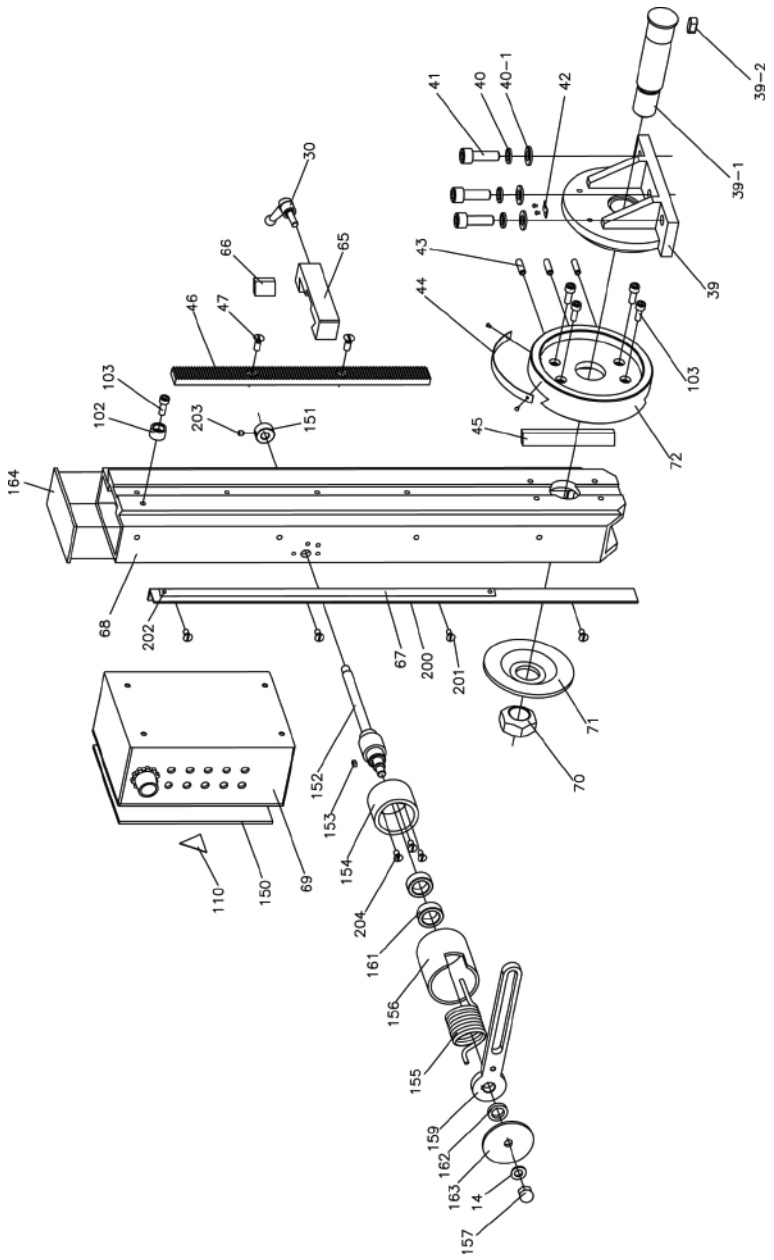

Spindle and Gear box

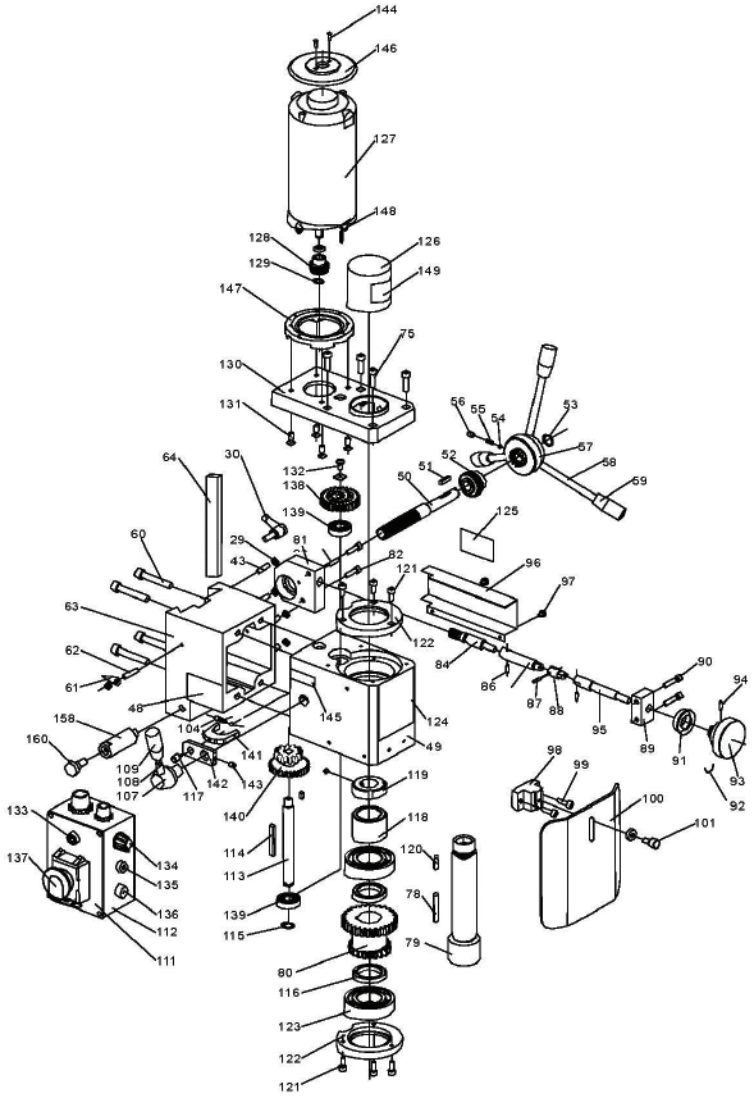

Parts List

Part No.	Description	Q'ty	Part No.	Description	Q'ty
1	Base	1	40	Spring washer 10	3
2	X-axis feeding screw	1	40-1	Washer 10	3
2-1	Key 4 x 16	2	41	Cap screw M10 x 30	3
4	Dial	2	42	Guide finger	2
5	Hand wheel	2	43	Set screw M6 x 22	7
6	Nut M8	2	44	Ruler	1
7	Knob	2	45	Wedge	1
8	Screw M8 x 55	2	46	Gear rack	1
9	Cap screw M6 x 8	8	47	Cap screw M6 x 12	4
10	Holding plate (1)	1	48	Name plate	1
11	Dust guard cover	1	49	Spindle box	1
12	Holding plate(2)	2	50	Pinion	1
13	Ball bearing 8200	2	51	Key 4 x 25	1
14	Washer	2	52	Bevel gear	1
15	Nut M8	4	53	Retaining ring 12	1
16	Y-axis ruler	1	54	BallΦ5.0	1
17	Cap screw M6 x 16	4	55	Spring 0.8 x 0.8 x 10	1
18	Y-axis bearing seat	1	56	Screw M6 x 8	1
19	Working table	1	57	Handle stock	1
20	Y-axis feeding screw	1	58	Operating lever	3
21	End cover	1	59	Lever cap	3
22	Screw M6 x 10	2	60	Cap screw M8 x 25	4
23	Y-axis screw nut	1	61	Guide finger	1
24	Holding plate(3)	1	62	Cap screw M6 x 25	1
25	Dust guard cover	1	63	Spindle box seat	1
26	Screw seat	1	64	Wedge	1
27	Cap screw M6 x 16	2	65	Limit block	1
28	Set screw M6 x 22	6	66	Wedge	1
29	Nut M6	13	67	Ruler	1
30	Handle	3	68	Fuselage	1
31	Screw M6 x 10	2	69	Electric box	1
32	Guide finger	1	70	Lock nut M24	1
33	Screw M6 x 8	1	71	Big washer	1
34	X-axis wedge	1	72	Connecting strut	1
35	Saddle	1	78	Key 5 x 5 x 40	1
36	Y-axis wedge	1	79	Spindle	1
37	X-axis screw nut	1	80	Transmission gear	1
38	Cap screw M6 x 25	2	81	Support block	1
39	Fuselage seat	1	82	Screw M5 x 20	2
39-1	Shaft	1	83	Pin 4 x 15	1
39-2	Key 8 x 12	1	84	Worm	1

Part No.	Description	Q'ty	Part No.	Description	Q'ty
85	Sleeve	1	126	Protecting cover	1
86	Pin 3 x 12	1	127	Motor	1
87	Pin 3 x 12	2	128	Motor gear	1
88	Adjustable union	1	129	Intering ring 9.0	1
89	Bracket	1	130	Motor seat	1
90	Screw M5 x 25	1	131	Flat screw M6 x 12	4
91	Dial	1	132	Round screw M5 x 8	4
92	Spring steel 1.0	3	133	Yellow lamp	1
93	Small hand wheel	1	134	Speed control knob	1
94	Screw M5 x 16	1	135	Green lamp	1
95	Small shaft	1	136	Fuse box	1
96	Cover	1	137	Emergency stop switch	1
97	Screw M4 x 6	2	138	Gear	1
98	Support of dust cover	1	139	Ball bearing 80101	2
99	Screw M5 x 16	2	140	Transmission gear	1
100	Dust guard	1	141	Bar	1
101	Clamp bolt M6 x 12	1	142	Linking board	1
102	Upper end washer	1	143	Set screw M5 x 8	1
103	Upper end screw M6 x 16	1	144	Self-tapping Screw ST2.9 x 8	2
104	Set screw M6 x 6	1	145	H/L label	1
105	Spring 0.8 x 4.8 x 10	1	146	Motor cover	1
106	Ball Φ 5.0	1	147	Motor connecting flange	1
107	Handle seat	1	148	Screw M6 x 10	4
108	Double head bolt M8 x 70	1	149	Warming label	1
109	Knob	1	150	PC board	1
110	Warning label	1	151	Lock sleeve	1
111	Controller	1	152	Rotor shaft	1
112	Label on controller	1	153	Key 4 x 6	1
113	Shaft (1)	1	154	Spring support	1
114	Double round head key4 x 4 x 45	1	155	Torsion spring	1
115	Internal ringΦ12	1	156	Cover	1
116	Spacing ring	2	157	Nut	1
117	Small shaft	1	158	Prop	1
118	Spacing ring	1	159	Supporting shank	1
119	Spindle nut	1	160	Screw	1
120	Double round head key5 x 5 x 30	1	161	Washer	2
121	Cap screw M5 x 8	6	162	Internal ring 12	1
122	Bearing cover	2	163	Cover	1
123	Ball bearing 80206	2	164	Top Cover	1
124	Name plate	1	165	Screw M 3 x 6	4
125	Fine feeding label	1			

Replacement Parts

- For replacement parts and technical questions, please call Customer Service at 1-800-222-5381.
- Not all product components are available for replacement. The illustrations provided are a convenient reference to the location and position of parts in the assembly sequence.
- When ordering parts, the following will be required: Model Number, Serial Number/Lot Date Code, and Description.
- The distributor reserves the rights to make design changes and or improvements to product lines and manuals without notice.

Limited Warranty

Northern Tool and Equipment Company, Inc. ("We'' or '"Us'') warrants to the original purchaser only ("You'' or "Your") that the Ironton Air Tool product purchased will be free from material defects in both materials and workmanship, normal wear and tear excepted, for a period of one year from date of purchase. The foregoing warranty is valid only if the installation and use of the product is strictly in accordance with product instructions. There are no other arranties,express or implied, including the warranty of merchantability or fitness for a particular purpose.If the product does not comply with this limited warranty, Your sole and exclusive remedy is that We will, at our sole option and within a commercially reasonable time, either replace the product without charge to You or refund the purchase price (less shipping). This limited warranty is not transferable.

Limitations on the Warranty

This limited warranty does not cover: (a) normal wear and tear; (b) accessories both consumable and durable; (c) damage through abuse, neglect, misuse, or as a result of any accident or in any other manner; (d) damage from misapplication, overloading, or improper installation; (e) improper maintenance and repair; and (f) product alteration in any manner by anyone other than Us, with the sole exception of alterations made pursuant to product instructions and in a workmanlike manner.

Obligations of Purchaser

You must retain Your product purchase receipt to verify date of purchase and that You are the original purchaser. To make a warranty claim, contact Us at 1-800-222-5381, identify the product by make and model number, and follow the claim instructions that will be provided. The product and the purchase receipt must be provided to Us in order to process Your warranty claim. Any returned product that is replaced or refunded by Us becomes our property. You will be responsible for return shipping costs or costs related to Your return visit to a retail store.

Remedy Limits

Product replacement or a refund of the purchase price is Your sole remedy under this limited warranty or any other warranty related to the product. We shall not be liable for: service or labor charges or damage to Your property incurred in removing or replacing the product; any damages, including, without limitation, damages to tangible personal property or personal injury, related to Your improper use, installation, or maintenance of the product; or any indirect, incidental or consequential damages of any kind for any reason.

Assumption of Risk

You acknowledge and agree that any use of the product for any purpose other than the specified use(s) stated in the product instructions is at Your own risk.

KLUTCH®
Mini Milling Machine
OWNER'S MANUAL

Governing Law

This limited warranty gives You specific legal rights, and You also may have other rights which vary from state to state. Some states do not allow limitations or exclusions on implied warranties or incidental or consequential damages, so the above limitations may not apply to You. This limited warranty is governed by the laws of the State of Minnesota, without regard to rules pertaining to conflicts of law. The state courts located in Dakota County, Minnesota shall have exclusive jurisdiction for any disputes relating to this warranty.

KLUTCH®
Distributed by
Northern Tool and Equipment Company, Inc.
Burnsville, Minnesota 55306
NorthernTool.com
Made in China